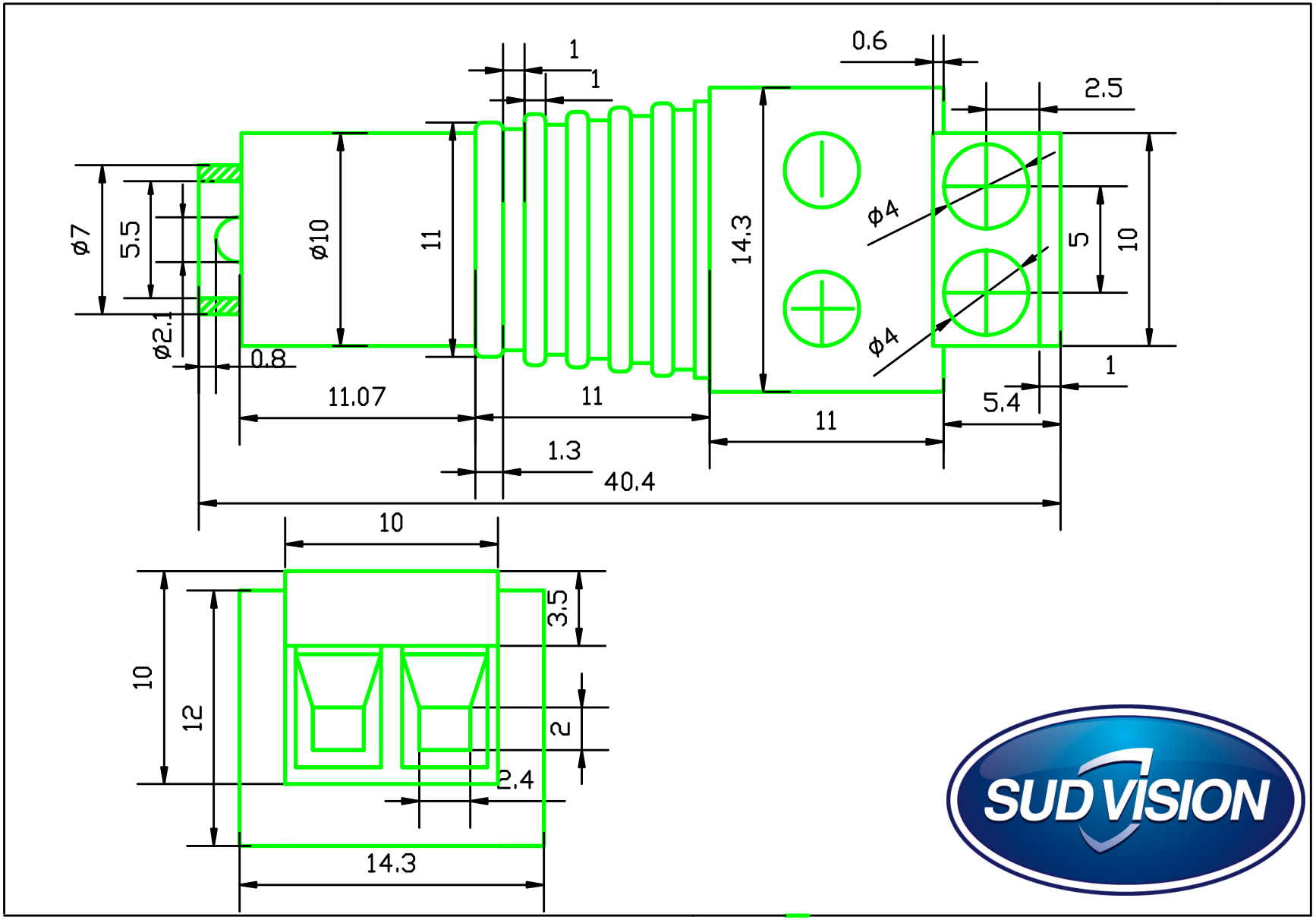
1
1
0.6
2.5
ø7
5.5
ø10
11
14.3
ø4
ø4
5
10
ø2.1
0.8
11.07
11
11
5.4
1
1.3
40.4
10
3.5
10
12
2
2.4
14.3